CLIO

Office chair

GuangZhou Via Furniture Co.,Ltd.
+86-13432029009
info@viafurniture.cn
www.viasmartoffice.com

Office address:Room 222, No. 56 Zhongyun Road,
Zhongcun Street,Panyu District,
Guangzhou,Guangdong,China

Factroy address:Floor 2, Building 13,
Xinsha Industrial zone, Muzhou town,
Jiangmen City, Guangdong,China

DESIGN

DESIGN CONCEPT

The design inspiration of the Clio office chair comes from the architectural design of modern bridges. It integrates the current design aesthetics, sets off the sense of line of the office chair, and reflects the same durability and practicality as bridge buildings.

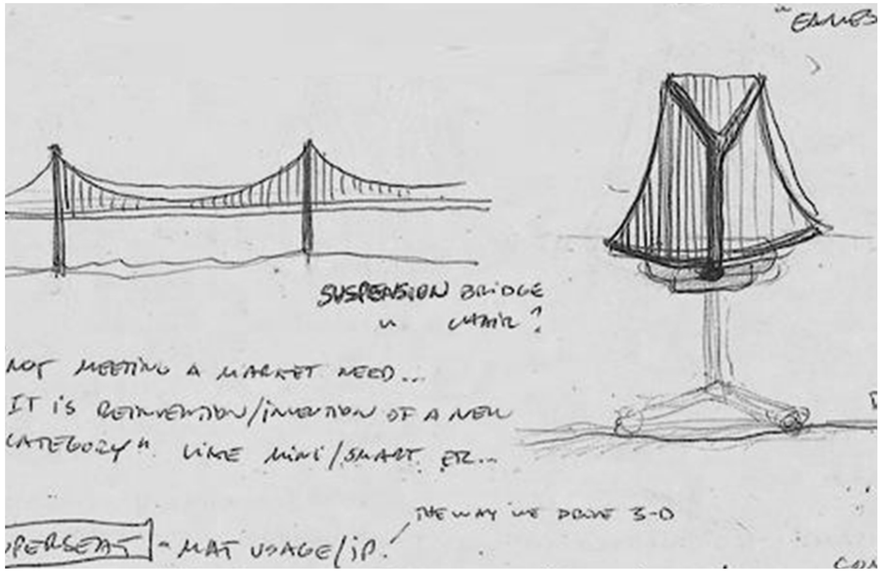

The inspiration story from the Y-Chair

The unique backrest support structure
enhances the three-dimensional
effect and fashion sense

Following the trend of modern
office aesthetics, with simple and
smooth lines and elegant and generous shapes

Breathable and not sweltering,
bringing a warm touch

Choosing a leather office chair is not only choosing a kind of comfort, but also embracing a luxurious, durable and exquisite lifestyle.

The unique backrest support structure enhances the three-dimensional effect and fashion sense.

FUNCTION DESCRIPTION

MATERIALS & COLORS

Fabric

HY-6920 Light Blue | HY-6900 Green | HY-6917 Red | HY-6931 Black | HY-6926 Grey

PU Leather

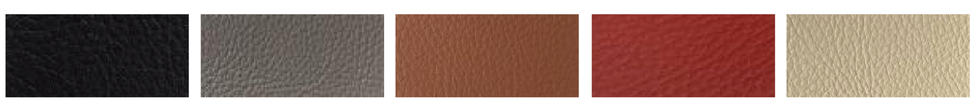

2000-19 Black | 2000-15 Grey | 2000-09 Dark Brown | 2000-26 Red | 2000-03 Cream White

Genuine Leather

03# Black | X-WOI Dark Brown | 207 Dark Grey | 1001 Red | 6601 Cream white

Armrests&Base

3 position lockable mechanism

self-adaptive mechanism with slider

White nylon base

Aluminum base

Black nylon base

SIZE SPECIFICATION

Fabric

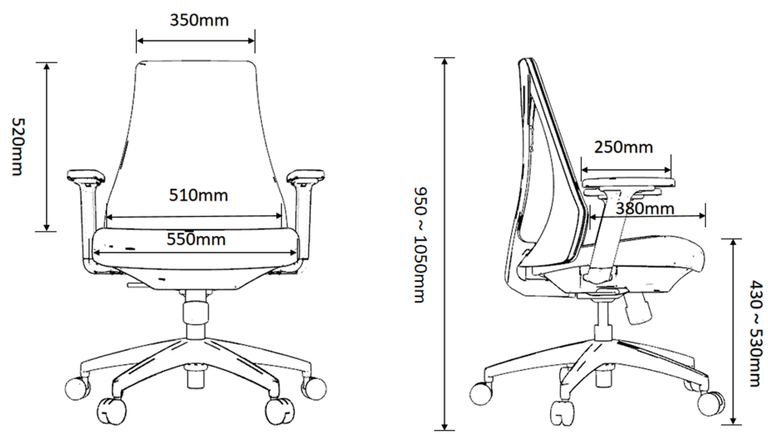
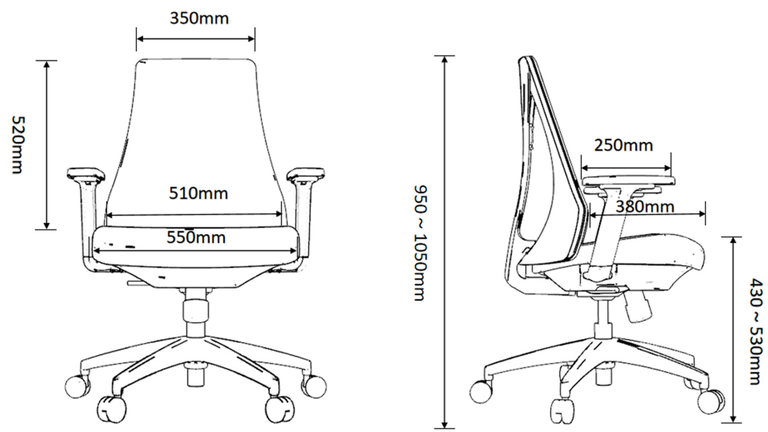
PU Leather/Genuine Leather