ELEGANT

Office chair

GuangZhou Via Furniture Co.,Ltd.
+86-13432029009
info@viafurniture.cn
www.viasmartoffice.com

Office address:Room 222, No. 56 Zhongyun Road,
Zhongcun Street,Panyu District,
Guangzhou,Guangdong,China

Factroy address:Floor 2, Building 13,
Xinsha Industrial zone, Muzhou town,
Jiangmen City, Guangdong,China

DESIGN

DESIGN CONCEPT

The design inspiration of Elegant chair lumbar support comes from the front net design of the BMW Mini Cooper R58, adhering to its delicacy and classic, highlighting the quality of the Elegant office chair.

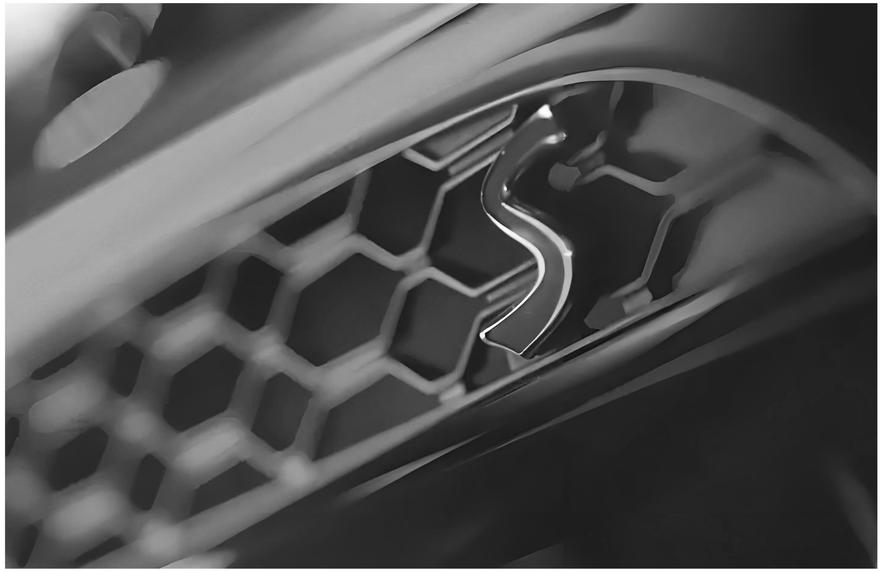

One chair, one story

Adopting the hollow grid design,
continuing the classic, forging a brand story
with the flexible geometric beauty

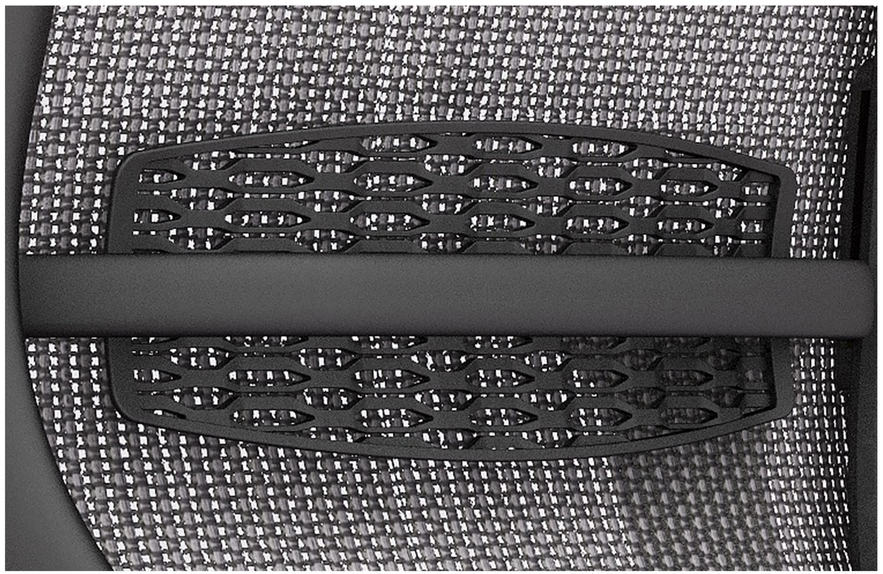

Adjustable tilting Mechanism

Elastic back design,
stretch out as much as you like

Weightless beauty.
Effortless support.

Elegant Executive armchair, with a mid-back swivel base and casters, is a piece of furniture designed for corporate meeting Spaces that combines elegance, modernity and ergonomics.

Elegant chair has surrounding lines and unique interiors. It can be extensively customized with colorful and even vibrant fabrics, and can be easily integrated into existing furniture or create a unique and elegant working environment.

It combines rigorous scientific methods with
the principles of supporting the human body,
and at the same time integrates the perfect interpretation
of the simple and neat outline by the design.

This is a simple and
agile office chair.

Rich color options. Whether it is a composed business style or a light-color creative office space, it can easily blend into all kinds of office scenes and perfectly match furniture such as office desks and filing cabinets.

FUNCTION DESCRIPTION

Breathable Mesh

Breathable and cool,
durable with long-time use.

Perforated Lumbar Support

Minimalistically-designed lumbar
support with oval pattern, it relieves
pressure from your lower back when
sitting for a long time.

3D Armrests

Height-adjustable, pivoting,
aft and fore adjustments

Customized Logo

Customizable design with optional labels for
easy corporate asset management

Adjustable tilting Mechanism

Adjustable knob

Nylon Base

High load capacity with a stable structure

Nylon Casters

High abrasion resistance, a preferred
choice for hard floors

MATERIALS & COLORS

Mesh

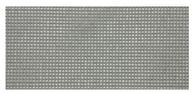
YM99-10 Light Grey

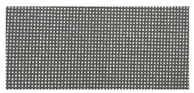
YM99-10-5 Dark Grey

YM99-11 Black

YM99-13-3 Orange

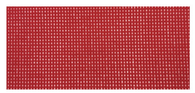
YM99-12 Red

YM99-10-14 Grey

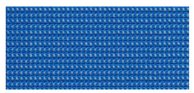
YM99-15-1 Dark Blue

YM99-15-7 Light Blue

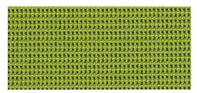
YM99-16 Green

Fabric

26-90-10 Black

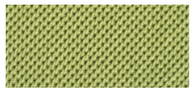
26-90-16 Green

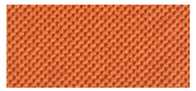
26-90-17 Orange

26-90-18 Light Grey

26-90-19 Dark Grey

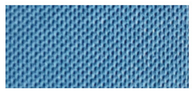
26-90-26 Blue

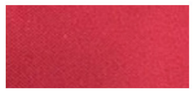
26-90-14 Red

LE9140B-40 Dark Grey

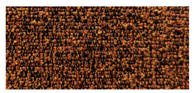
LE9140B-43 Orange

LE9140B-32 Black

LE9140B-28 Green

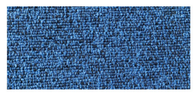
LE9140B-49 Blue

Leather

2000-19 Black

2000-15 Grey

2000-09 Dark Brown

2000-26 Red

2000-03 Cream White

Armrests&Base

Height-adjustable Armrests

3D Armrests

Aluminum Armrests

Aluminum base

Black nylon base

SIZE SPECIFICATION

【Unit: mm】

Leather

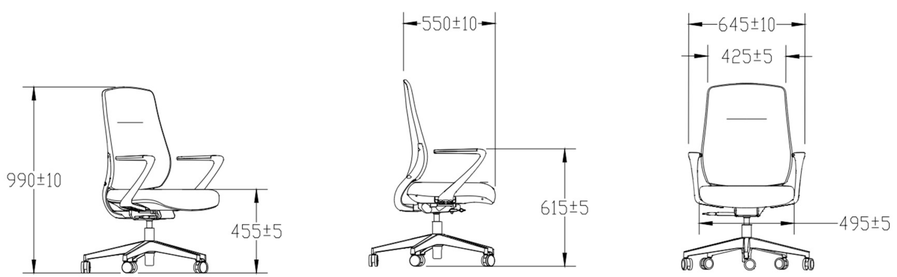

Plastic

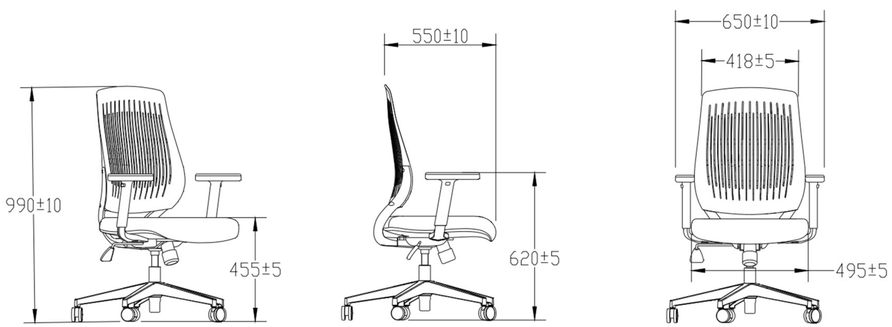

Mesh--No Headrest

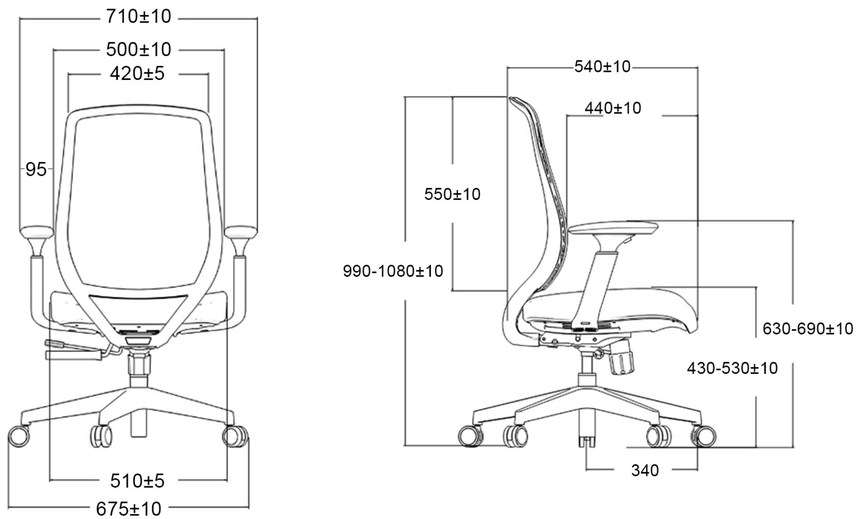
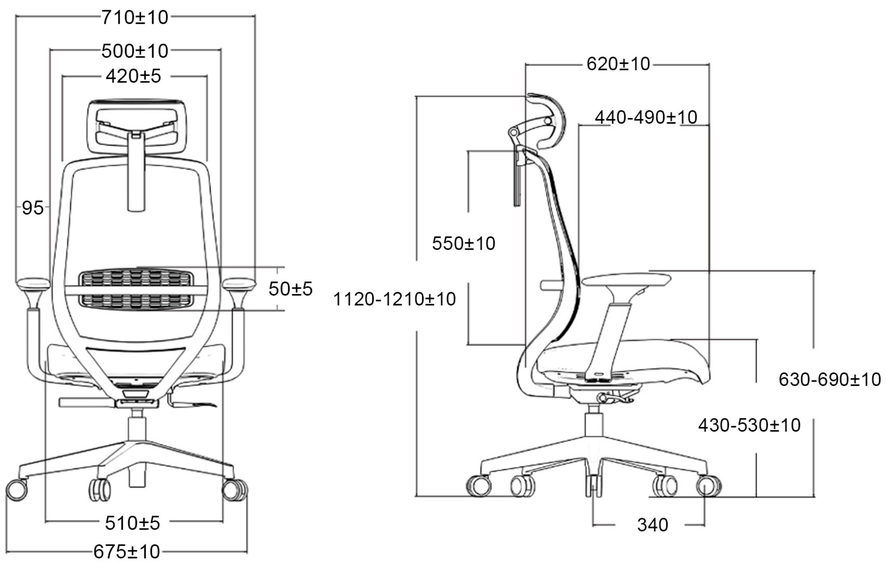
Mesh--Headrest