ST01

leather chair

GuangZhou Via Furniture Co.,Ltd.
+86-13432029009
info@viafurniture.cn
www.viasmartoffice.com

Office address:Room 708, No. 56 Zhongyun Road,
Zhongcun Street,Panyu District,
Guangzhou,Guangdong,China

Factroy address:Floor 2, Building 13,
Xinsha Industrial zone, Muzhou town,
Jiangmen City, Guangdong,China

Fluid lines and calm color tones blend effortlessly into diverse office settings, whether modern business, traditional and steady, or creative and dynamic.

High-quality leather offers both flexibility and durability, while being stain-resistant and easy to clean.

FUNCTION DESCRIPTION

high back

Perfectly contours
to your body

Import Leather

Wear-resistant and stain-
resistant, with a fine texture
and multiple color options.

closed armrests

Fully wrapped in leather with
a metal plate underneath.

seat cushion

High-density foam padding,
fully wrapped in leather.

Function mechanism

Adaptive tilt adjustment for
finding your most comfortable position.

Aluminum base

High load capacity with a stable structure

Nylon Casters

High abrasion resistance, a preferred
choice for hard floors

IMPORT LEATHER

PW8621
白色(White)

PW906
浅灰(Light grey)

PW8615
浅棕(Light brown)

PW6812
深棕(Dark brown)

PW8628
碳灰(Carbon grey)

PW8617
枣红(Russet)

PW8619
黄色(Yellow)

PW8618
葡萄紫(Grape purple)

PW8616
黑色(black)

405
爱马仕橙(Orange)

401
爱马仕灰(Grey)

404
爱马仕棕(Brown)

PU LEATHER

K61-1
浅灰(Light grey)

K61-2
浅棕(Light brown)

K61-4
深棕(Dark brown)

K61-5
黑色(Black)

K61-3
碳灰(Carbon grey)

K61-6
白色(White)

K61-9
黄色(Yellow)

K61-8
葡萄紫(Grape purple)

K61-7
枣红(Russet)

LOCAL LEATHER

PWS37
米灰(Griege)

PW1809
咖色(Coffee)

PW1812
橘黄(Bright orange)

PWH381
浅棕(Light brown)

PWH1817
浅灰(Light grey)

PWH382
碳灰(Carbon grey)

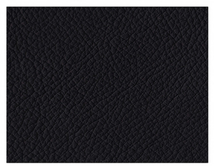
PWH390
黑色(Black)

PWH388
深棕(Dark brown)

SIZE SPECIFICATION

【Unit: inch】

Medium back

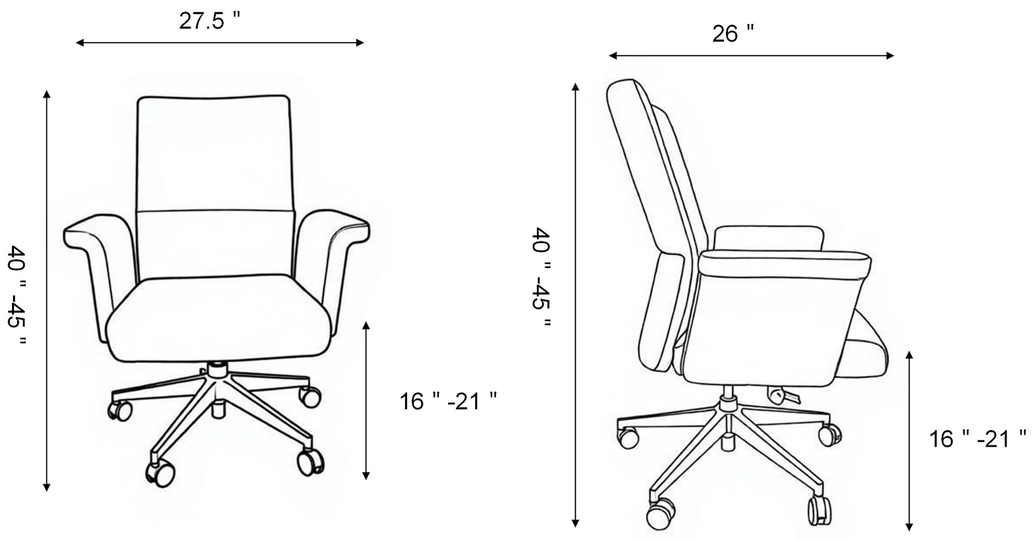
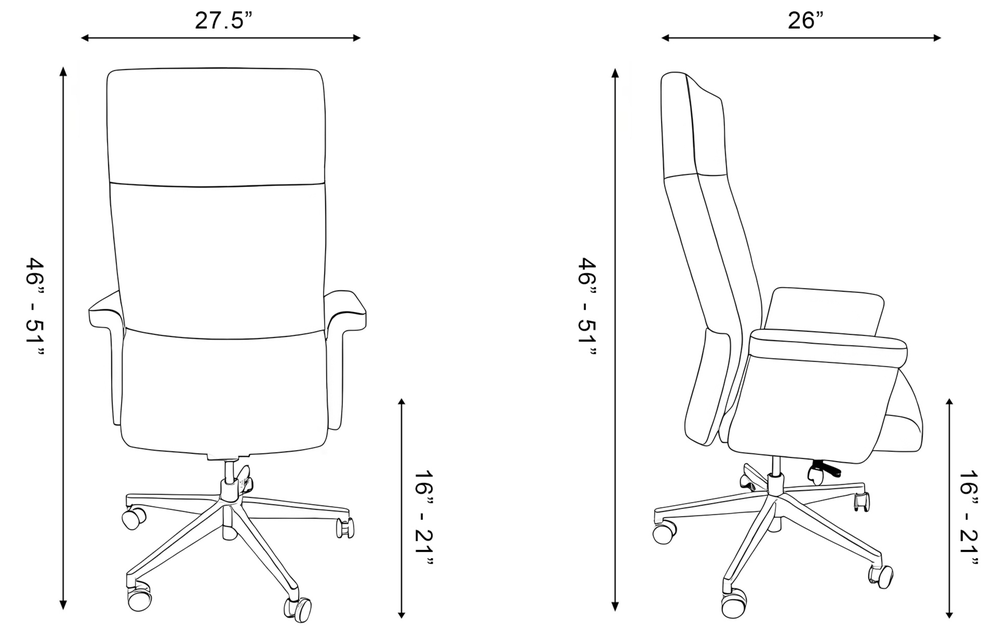
high back