GuangZhou Via Furniture Co.,Ltd.
+86-13432029009
info@viafurniture.cn
www.viasmartoffice.com

Office address: Room 708, No. 56 Zhongyun Road,
Zhongcun Street,Panyu District,
Guangzhou,Guangdong,China

Factroy address: Floor 2, Building 13,
Xinsha Industrial zone, Muzhou town,
Jiangmen City, Guangdong,China

MOORGEN

Training Desk

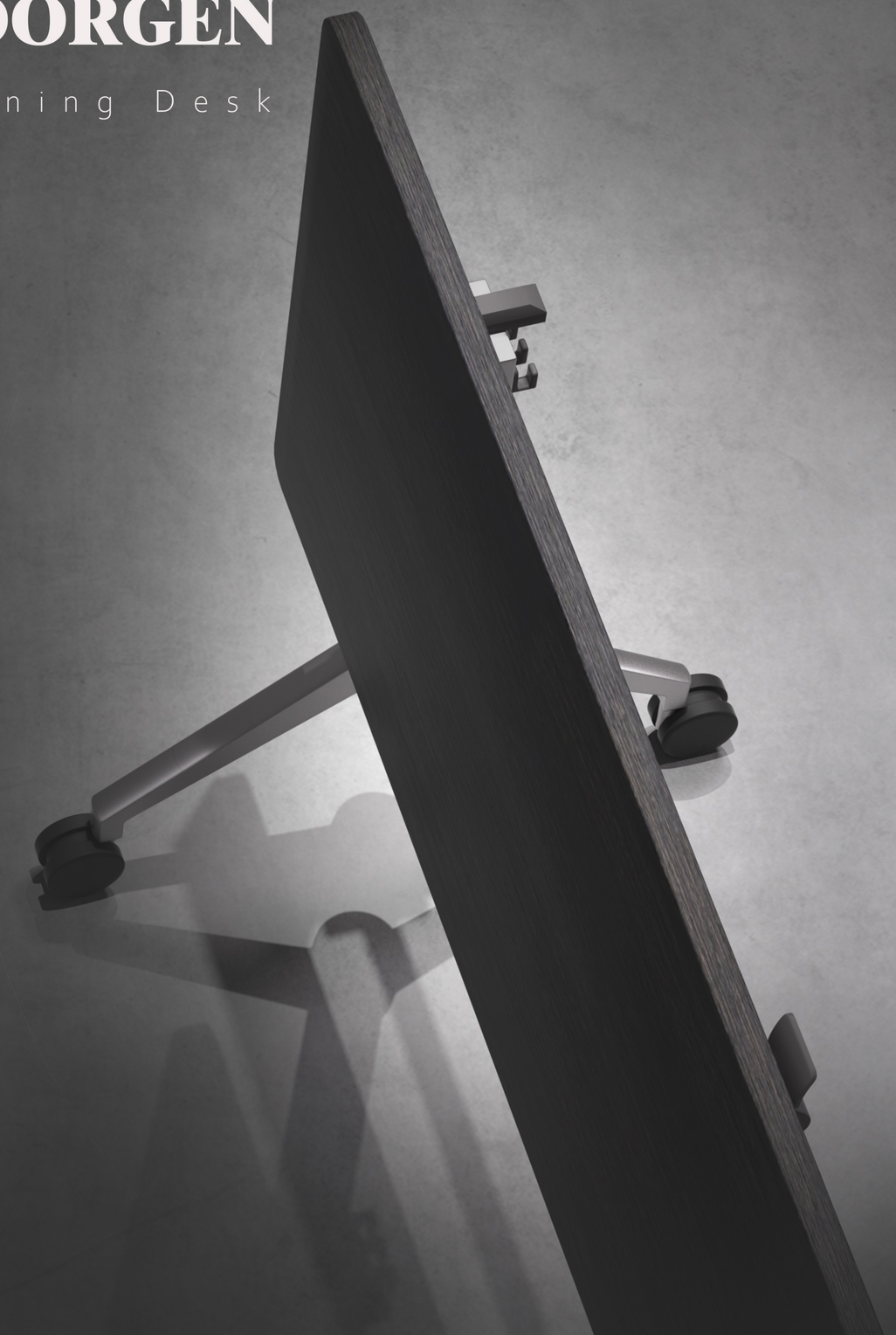

Stay flexible and make venue
management easier than ever before.

From team huddles to company-wide trainings,
our modular furniture can be effortlessly moved
and combined to maximize your space.

Herringbone design. Easy to move and extend.
Adapts in seconds from a team huddle to
a full-scale training, maximizing your space.

The beam is adjustable, allowing it to
fit any desktop with a length
between **1200mm and 1800mm**.

Whether it's a large-scale training session or an impromptu meeting, our folding tables and chairs offer flexible solutions, making venue management easier than ever before.

Easy layout changes to meet diverse teaching needs.
Sturdy and durable with exquisite details, it is an ideal choice for creating a modern training room.

Support personalized customization to help you create an exclusive training space that truly aligns with your team culture and needs.

Quick storage,

space-saving. Whether for large-scale training or temporary meetings, our folding tables and chairs can respond flexibly, making venue management easier than ever before.

Easy layout changes to meet diverse teaching needs.
Sturdy and durable with exquisite details, it is an ideal choice for creating modern training rooms or meeting rooms.

Woodgrain MDF

S195

S211

W03

W04

W06

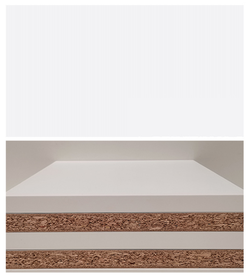
A15 White

Metallic Color

1198B

7035

C2

D3

RAL9006
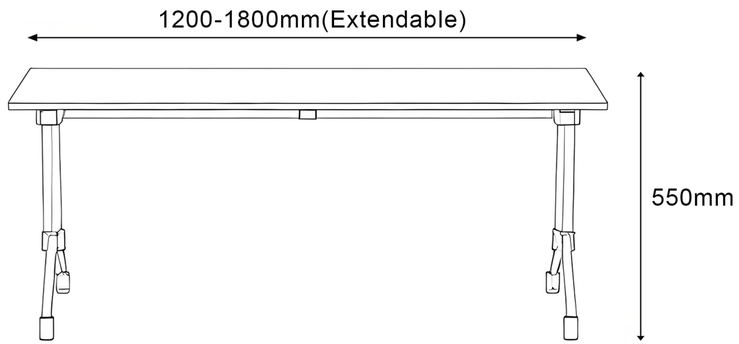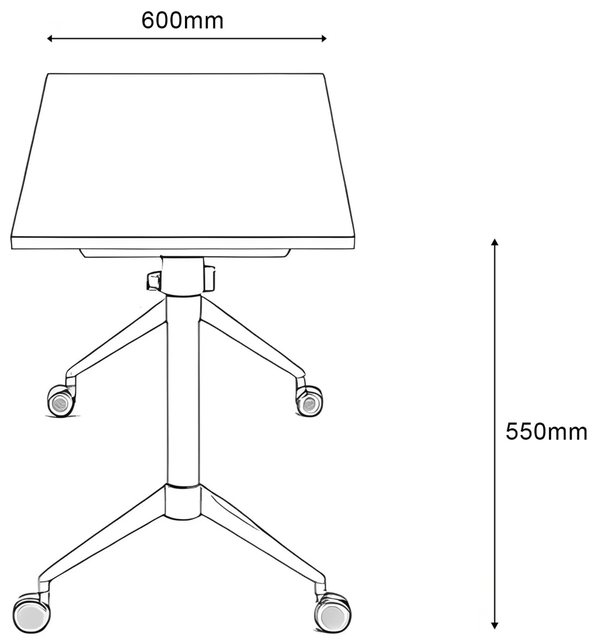
Dimensions